Manual RS232/485 ISO

Ref.No: 8410.CON2

Status V15/ 22.4.2005

Lufft

Table of contents

1 GENERAL 3

2 STORAGE CONDITIONS 4

3 OPERATING CONDITIONS 4

4 BLOCK DIAGRAM 5

5 HARDWARE DESCRIPTION 6

6 EXAMPLE OF CONFIGURATION 8

7 PIN ASSIGNMENT 9

7.1 CON-SENS (PIN ASSIGNMENT ON THE GALVANIC ISOLATED SIDE) 9

7.2 CON IN (PIN ASSIGNMENT „INPUT SIDE“ FOR THE CONVERTER) 9

7.3 CON-OUT (PIN ASSIGNMENT „OUTPUT SIDE“ FOR THE CONVERTER) 9

8 SETTING MASTER/SLAVE 10

9 TECHNICAL DATA RS232/485-ISO 11

1 General

The converter RS232/485-ISO enables to operate and to network the road sensor IRS21 in a galvanic isolated way. The characteristics of the converter are the following:

- Networking of max. 8 units (IRS and/or R²S)
- Selection between master / slave operation via switch
- Galvanic isolated voltage supply for IRS21 and R²S
- Low current consumption
- Inverse-pole protection of the voltage supply
- Functions visualization on LED
- Mounting on DIN rail
- Plug-in connectors for RS485, power supply with ON/OFF in double execution for the use of more than one module
- Contacts in Cage Clamp Technique (except RS232 interface)

2 Storage conditions

Environment temperature authorized	:	-40°C ... +60°C
Environment rel. humidity authorized	:	< 95% rel. humidity non condensing

3 Operating conditions

Operating temperature authorized	:	-30°C ... +70°C
Operating rel. humidity	:	95% rel. hum. or < 20g/m³ (the smallest value is valid)

4 Block diagram

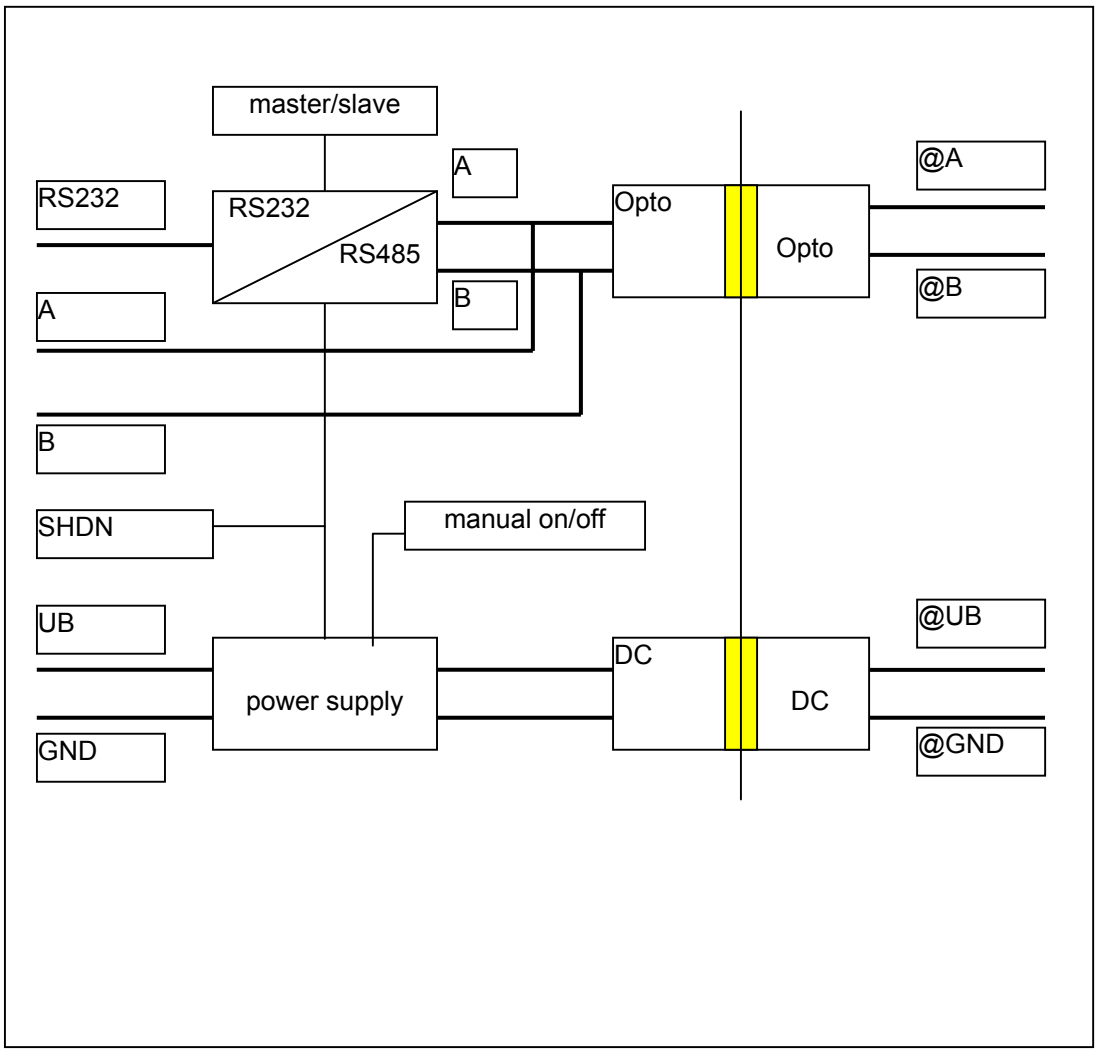

Block diagram: RS232/485-ISO converter

For a better understanding, pins A, B, SHDN, UB and GND are not shown in double execution.

5 Hardware description

The RS232/485-ISO converter enables the set up of galvanic isolated systems based on the road sensor IRS21. This converter allows the galvanic isolation of the bus as well as of the voltage supply.
The converter can be configurated either as master or as slave however it should be ensured that there is only one master in a network. If many modules are configurated as master , this will lead to bus conflicts. The master is connected via RS232 interface. All further slave modules will be networked via the RS485 connections A and B and the control line SHDN.
The control line SHDN is switched by the master module via the RS232 connection and enables all modules (including the master module) to be put in a “current economy” mode.
In order to make the wiring easier, the lines A, B, SHDN, UB, GND are doubled.

The data direction of the Opto coupler will be triggered by the starting bit (1->0 level crossing). The data direction remains active 20ms after the stop bit ends. It means the software has to wait >20ms after the change of the sending direction.

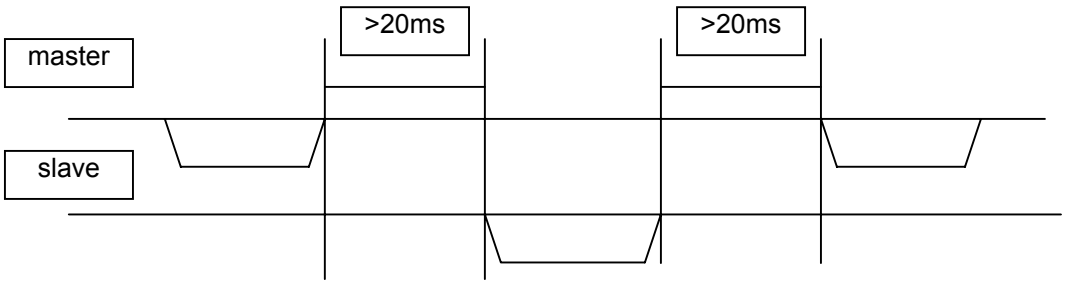

Example: communication – Timing master/slave operation

When using the level transducer (8410.KON2) the following aspects must be taken into account in the control software of the host computer (PC):

- The modem control line 'DTR' (Pin 4 of a 9 pin RS232 cable) switches the IRS power supply 'on' (H level [approx. +10 V]) or 'off' (L level [approx. -10 V]), respectively. The current state can be seen on a red LED on the circuit board of the level transducer.
- The modem control line 'RTS' (Pin 7 of a 9 pin RS232 cable) controls the data direction (halfduplex) from the host computer to the IRS (L level [approx. -10V]) or from the IRS to the host computer (H level [approx. +10V]), respectively.
- The IRS is always the slave. That means, the communication is always initiated by the host program.
- Before starting the communication, the IRS power supply has to be switched on for about 2 seconds, so that the sensor can carry out measurements. Commands which the host system sends too early will be ignored by the IRS.
- Immediately after transmitting the command telegram, the host computer **must** switch the data direction of the level transducer to 'IRS to host' by using the 'RTS' control line.
- The level transducer will instantaneously return all characters sent by the host (echo). These should be ignored by the control software.
- The IRS will wait about 100ms before answering.
- After reception of the IRS answer the data direction should be switched back to 'host to IRS' and the power supply for the road sensor should be deactivated.

The data transmission protocols are described in the IRS21 manual.

6 Example of configuration

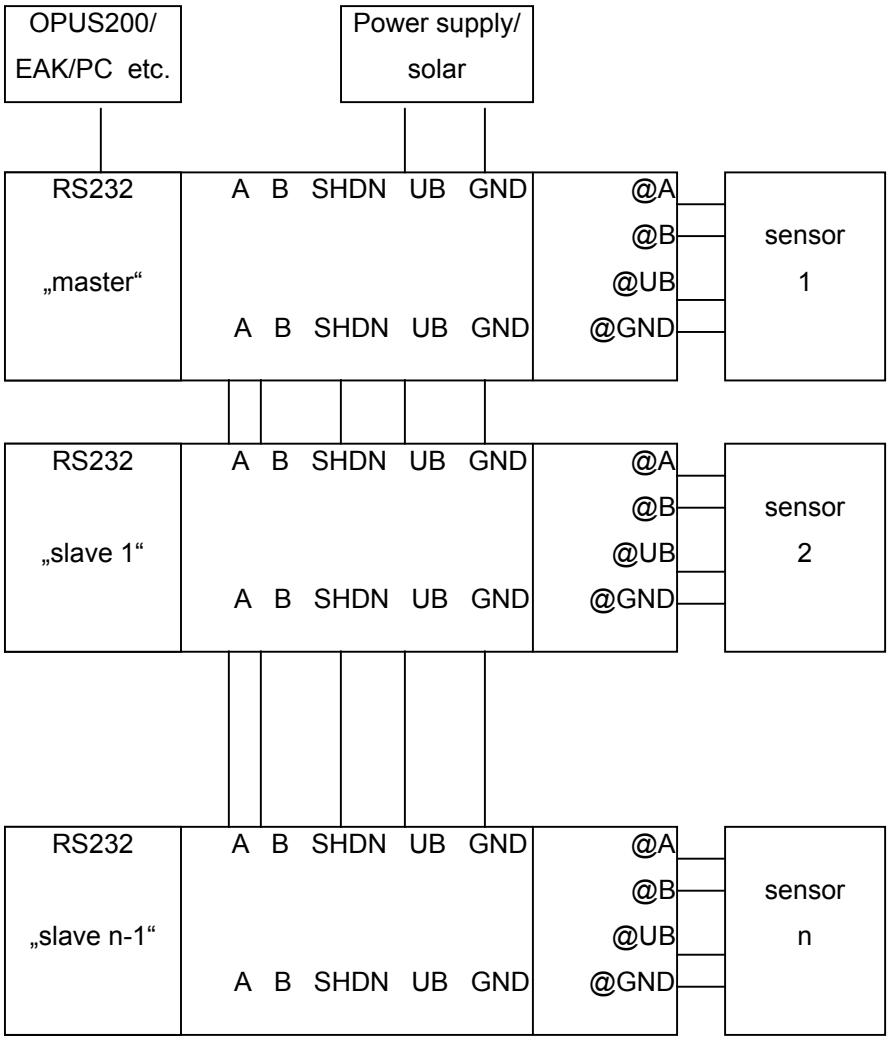

Example of configuration of a master module and slave modules

7 Pin assignment

7.1 CON-Sens (Pin assignment on the galvanic isolated side)

PIN	NAME	DESCRIPTION
1	@GD	Negative voltage supply for sensor, galvanic isolated
2	@UB	Positive voltage supply for sensor, galvanic isolated
3	@B	RS485 signal B for sensor (IRS21, R²S), galvanic isolated
4	@A	RS485 signal A for sensor (IRS21, R²S), galvanic isolated

7.2 CON_In (Pin assignment „input side“ for the converter)

PIN	NAME	DESCRIPTION
1	A	RS485 signal A for sensor (IRS21, R²S)
2	B	RS485 signal B for sensor (IRS21, R²S)
3	SHDN	On/off pin for the converter
4	UB	Positive voltage supply
5	GND	Negative voltage supply

7.3 CON-Out (Pin assignment „output side“ for the converter)

PIN	NAME	DESCRIPTION
1	A	RS485 signal A for sensor (IRS21, R²S)
2	B	RS485 signal B for sensor (IRS21, R²S)
3	SHDN	On/off pin for the converter
4	UB	Positive voltage supply
5	GND	Negative voltage supply

8 Setting master/slave

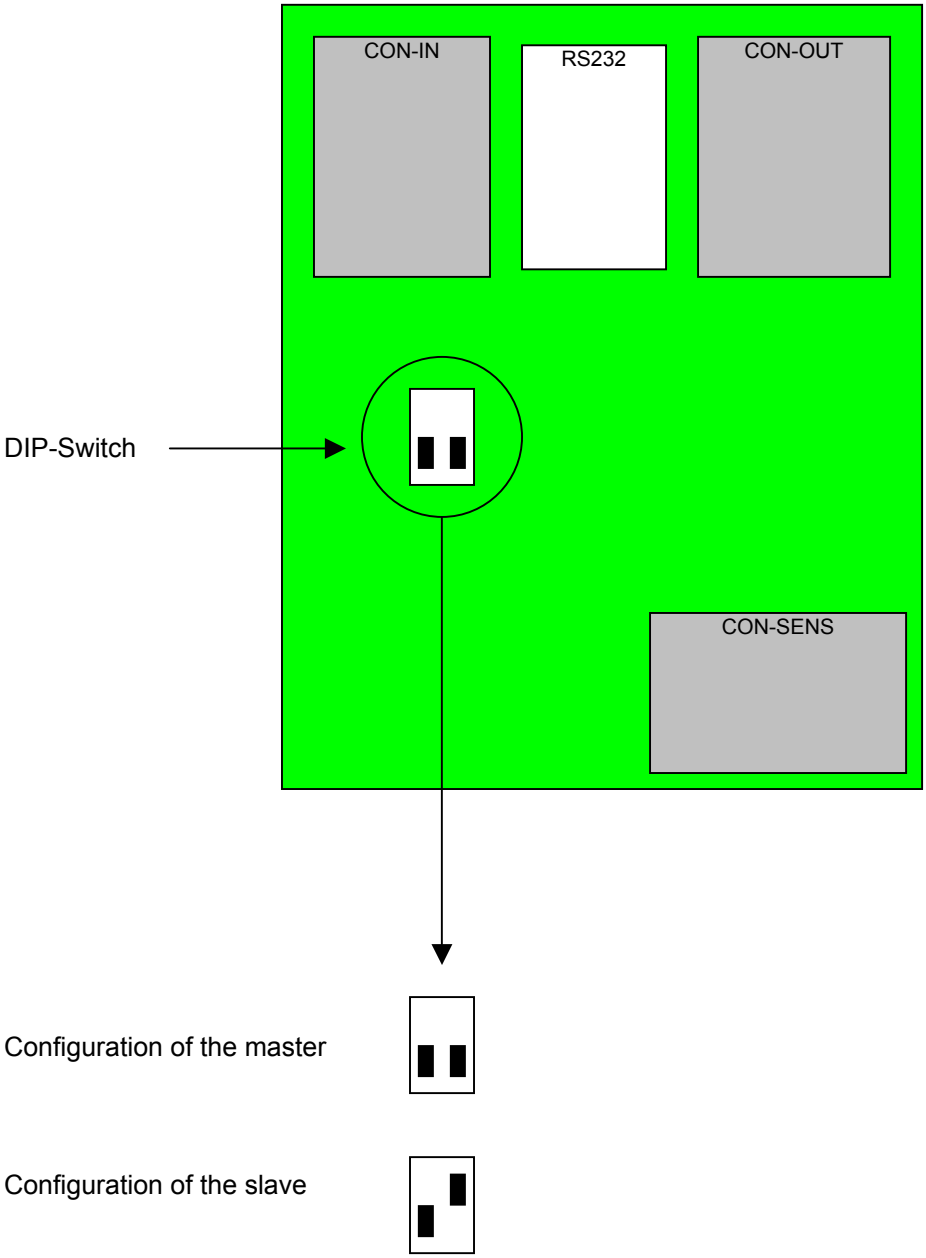

Important: In an IRS21 network, only one RS232/485-ISO converter should be configurated as„master“. All other RS232/485-ISO converters must be configurated as „slave“. The RS232 to the master enables the data transfer.

9 Technical data RS232/485-ISO

SYMBOL	PARAMETER	CONDITIONS	MIN	TYP	MAX	UNIT
UB	Input voltage	Inverse-pole protected	10	12	15	V
IB0	Input current	SHDN=0, RS232-Pegel=0V,	0		100	µA
IB1	Output current	SHDN=1, UB=12V, @IB=0mA		22		mA
IB2	Output current	SHDN=1, UB=12V, @IB=150mA		200		mA
@UB	Output voltage	SHDN=1, UB=12V, @IB<200mA	11,5	12	12,5	V
@IB	Output current	SHDN=1, UB=12V, @UB=12V		500		mA
@IB	Output current	SHDN=1, UB=12V, @UB=0V			600	mA
SHDN	„Switch on“ voltage	Module on	5		15	V
SHDN	„Switch off“ voltage	Module off	0		2	V
ISHDN	Input current	USHDN=12V, UB=12V			1	mA
U-ISO	Isolation voltage	Input/Output, acc. to MIL-Std. 275B Category I B	500			V
Temp	Operating temperature	@IB<200mA	-30		70	°C
Hum	Operating humidity	@IB<200mA, non condensing and < 20g/m³	0		95	%